PROJECT 28: Design and Analysis of Half Adder by using Cadence Virtuoso

A Comprehensive Study of Analog Circuits

By: Priya Chaudhary, Astitva Johri and
Bhavya Solanki

Chapters:

List of Figures……..…… 3

1. Introduction …….. 4
2. Brief Description…… 5
3. Circuit Design……. 6-8
   3.1 Schematic Design……... 6
   3.2 Simulation Setup…….. 6
   3.3 Transient Response..…….. 6
4. Simulation Results…….. 9
5. Advantages and Disadvantages…….. 10
   5.1 Advantages……. 10
   5.2 Disadvantages……. 10
6. Conclusion…….. 11
7. Frequently Asked Questions (FAQs)…….. 12

LIST OF FIGURES

Figure 3.1 Circuit of XOR Gate ...…...……..… 7

Figure 3.2 Circuit of AND Gate ...…...……..… 7

Figure 3.3 Circuit of Half Adder ...…...……. 8

Figure 4.1 Simulation Results of Half Adder …….…...…..... 9

1. INTRODUCTION

A **Half Adder** is a fundamental digital circuit that performs binary addition of two single-bit inputs, generating two outputs: **Sum (S)** and **Carry (C)**. The Sum is calculated using an XOR (Exclusive OR) gate, while the Carry is generated using an AND gate. Although simple, the half adder is an essential building block for constructing more advanced arithmetic circuits, such as full adders, multi-bit adders, and even complex processing units like ALUs (Arithmetic Logic Units).

This documentation covers the design and analysis of a half adder using **Cadence Virtuoso**, a professional tool widely used for designing, simulating, and testing both analog and digital circuits. By utilizing Cadence Virtuoso, we can create the schematic for the half adder, simulate its functionality across various input combinations, and ensure its accuracy before physical implementation. This hands-on approach emphasizes the importance of simulation and verification in modern digital circuit design, providing valuable insights for both academic and professional applications.

Truth Table of Half Adder:

A (Input)	B (Input)	Sum (S)	Carry (C)
0	0	0	0
0	1	1	0
1	0	1	0
1	1	0	1

2. BRIEF DESCRIPTION

A **Half Adder** is a fundamental building block in digital electronics and is used for the basic binary addition of two bits. Its simplicity makes it an essential circuit in the construction of more complex arithmetic circuits such as full adders, binary counters, and in the design of computational units like ALUs (Arithmetic Logic Units). The half adder takes two single-bit binary numbers as inputs and produces two outputs: **Sum (S)** and **Carry (C)**.

- **Sum (S)**: The result of the bitwise addition of the two input bits.
- **Carry (C)**: The bit that indicates whether there is an overflow (i.e., when both input bits are 1).

The **sum** is the XOR (Exclusive OR) of the two inputs, while the **carry** is the AND of the two inputs. Despite its simplicity, the half adder forms the core principle behind more sophisticated systems such as multi-bit adders, which are used in processors and digital systems to perform addition operations on larger numbers.

The design of the half adder using Cadence Virtuoso involves creating the necessary components (XOR and AND gates), connecting them to form the adder, and running simulations to verify the behavior of the circuit under different input conditions. This process not only demonstrates the design workflow in Cadence but also highlights the importance of simulation tools in confirming the accuracy and functionality of digital circuits before physical implementation.

3. CIRCUIT DESIGN

3.1 Schematic Design

1. **XOR Gate**: Implements the **Sum (S)** output, where **S = A ⊕ B**.
2. **AND Gate**: Implements the **Carry (C)** output, where **C = A AND B**.
3. Connect **A** and **B** to both gates. The output of the XOR gate is the **Sum**, and the output of the AND gate is the **Carry**.

3.2 Simulation Setup

1. **Testbench**: Create a testbench to simulate all possible input combinations (00, 01, 10, 11).
2. **Simulation Type**: Perform **Transient Analysis** to observe how the outputs change over time.
3. **Time Parameters**: Set the simulation time (e.g., 10 microseconds) and appropriate time step for accurate analysis.

3.3 Transient Response

The **transient response** of the half adder shows how the Sum and Carry outputs behave over time as the inputs change. For each combination of inputs, you should observe the following:

- **Input A = 0, B = 0**: Sum = 0, Carry = 0
- **Input A = 0, B = 1**: Sum = 1, Carry = 0
- **Input A = 1, B = 0**: Sum = 1, Carry = 0
- **Input A = 1, B = 1**: Sum = 0, Carry = 1

Simulate in **Cadence Virtuoso**, and check the waveforms for **Sum (S)** and **Carry (C)** to verify the expected outputs.

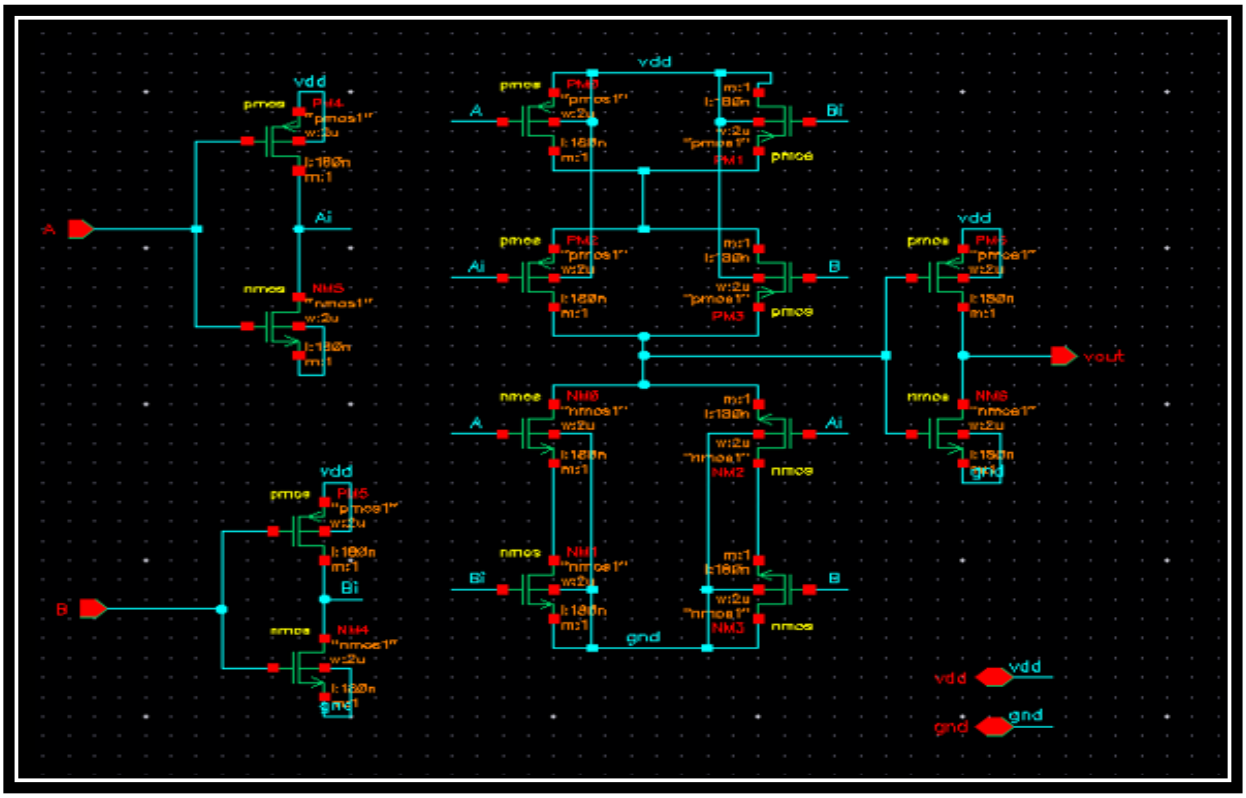

Figure 3.1 Circuit of XOR Gate

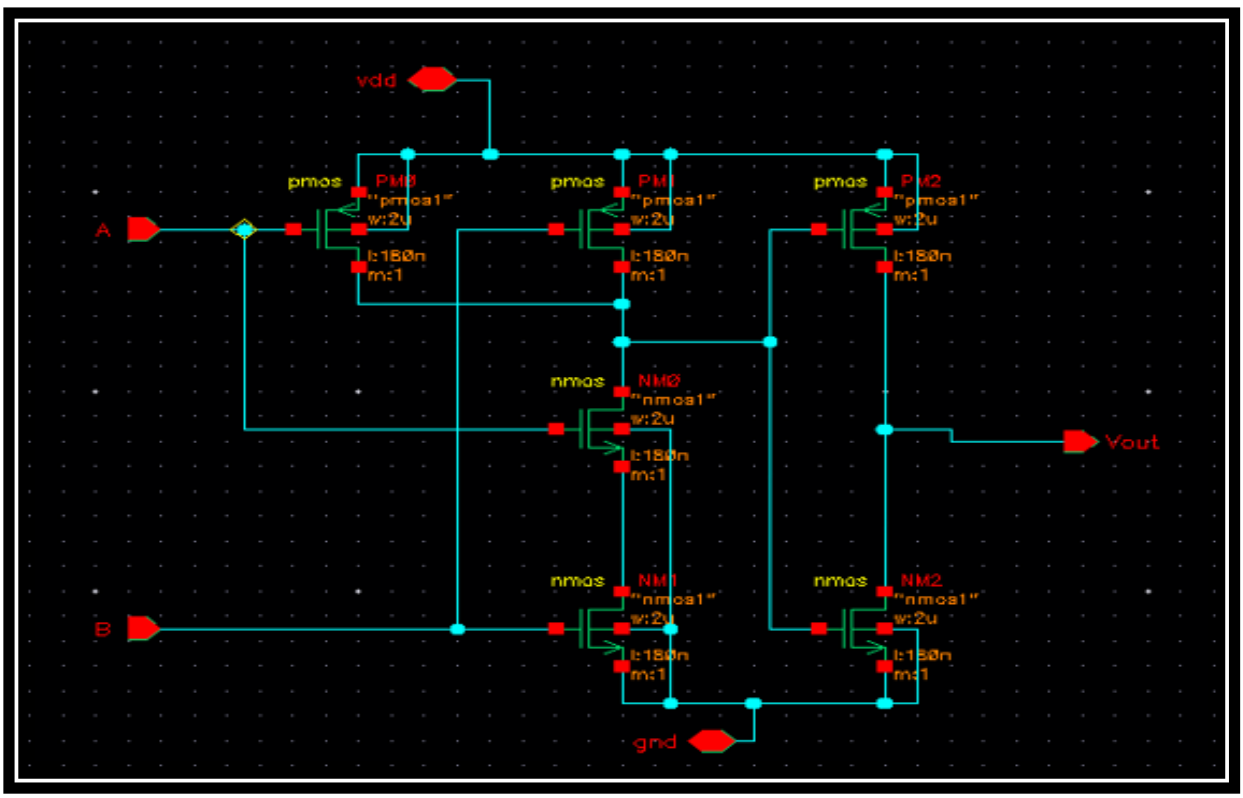

Figure 3.2 Circuit of AND Gate

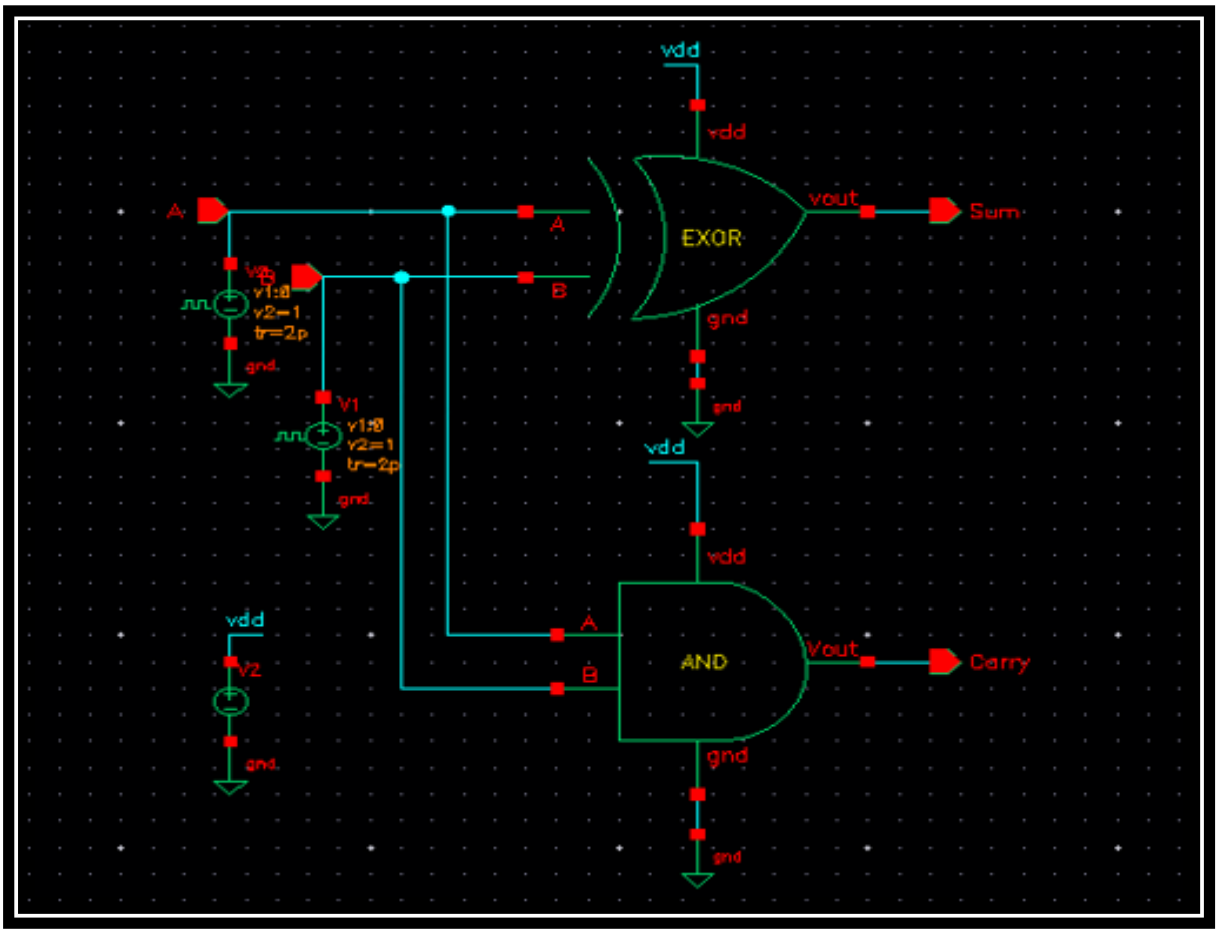

Figure 3.3 Circuit of Half Adder

4. SIMULATION RESULTS

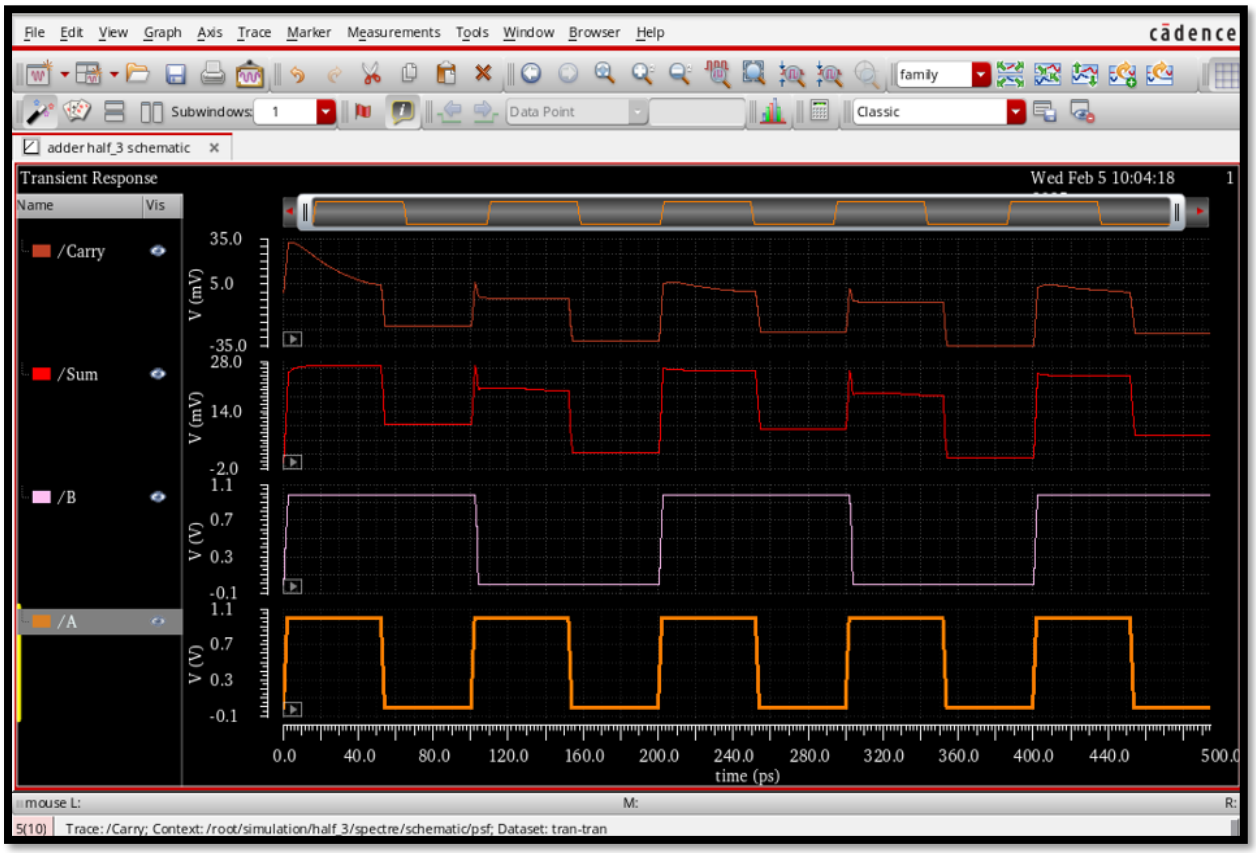

Figure 4.1: Simulation Results of Half Adder

5. ADVANTAGES AND DISADVANTAGES

5.1 Advantages:-

1. **Simplicity:** A half adder is simple to design and implement, requiring minimal components.
2. **Low Power Consumption:** It consumes relatively less power compared to other complex circuits.
3. **Foundation for Full Adder:** It forms the basic building block for designing a full adder.
4. **Fast Operation:** Since it only involves basic gates (XOR, AND), it performs addition quickly.

5.2 Disadvantages:-

1. **Limited Functionality:** It can only handle a single bit addition, making it insufficient for multi-bit operations.
2. **No Carry-in:** The half adder does not support a carry-in input, which limits its use in multi-digit arithmetic.
3. **No Error Detection:** It does not have a mechanism to detect errors during the addition process.

6. CONCLUSION

The design and analysis of a **Half Adder** using **Cadence Virtuoso** serve as a critical starting point for understanding digital circuit design and the process of simulating and verifying basic arithmetic operations. Through this design, we have demonstrated how fundamental logic gates, such as XOR and AND, can be used to perform binary addition and how these components can be seamlessly integrated into a functional half adder circuit.

The use of **Cadence Virtuoso** for this design allows for a more efficient and accurate representation of the circuit. The tool's advanced simulation capabilities, including tools like **Spectre**, help ensure that the half adder performs as expected across all possible input combinations.

While the half adder has its limitations—such as handling only single-bit inputs and not supporting carry-in operations—its simplicity makes it a valuable learning tool for students and engineers alike. Furthermore, it is the building block for more complex circuits like the **Full Adder**, which can be extended to multi-bit additions, forming the heart of arithmetic operations in digital systems.

In conclusion, designing the half adder using **Cadence Virtuoso** offers valuable insights into both the theoretical and practical aspects of digital logic design. It demonstrates how theoretical concepts translate into real-world circuit design and validation, reinforcing the critical importance of simulation and analysis in ensuring the correctness and reliability of digital circuits before implementation in hardware.

7. FREQUENTLY ASKED QUESTIONS (FAQs)

Q1. What is the difference between a Half Adder and a Full Adder?

Answer: A Half Adder adds two bits and outputs a sum and a carry, while a Full Adder adds three bits (including carry-in) and produces a sum and a carry-out.

Q2. Can a Half Adder be used in real-world applications?

Answer: A half adder is used in simple arithmetic circuits, but for more complex multi-bit additions, a full adder or multi-bit adder is required.

Q3. How can a Half Adder be tested in Cadence Virtuoso?

Answer: You can test the Half Adder by creating a testbench, applying all possible input combinations (00, 01, 10, 11), and verifying the sum and carry outputs through simulation**.**

Q4. Why do we use Cadence Virtuoso for this design?

Answer: Cadence Virtuoso provides a professional environment for designing, simulating, and testing both analog and digital circuits. It offers a wide range of components, simulation tools, and layout editors that simplify the design and verification process.

Q5. What are the limitations of designing in Cadence Virtuoso?

Answer: While Cadence Virtuoso is powerful, it can be complex for beginners and may require a steep learning curve. Additionally, resource-intensive simulations might require adequate computational power.